REVISIONS				
ZONE	REV.	DESCRIPTION	DATE	APPROVED
---	---	---	---	---
---	A	APPROVED	11/14/2022	JV
---	B	ECO-73252-001	7/12/2023	JV

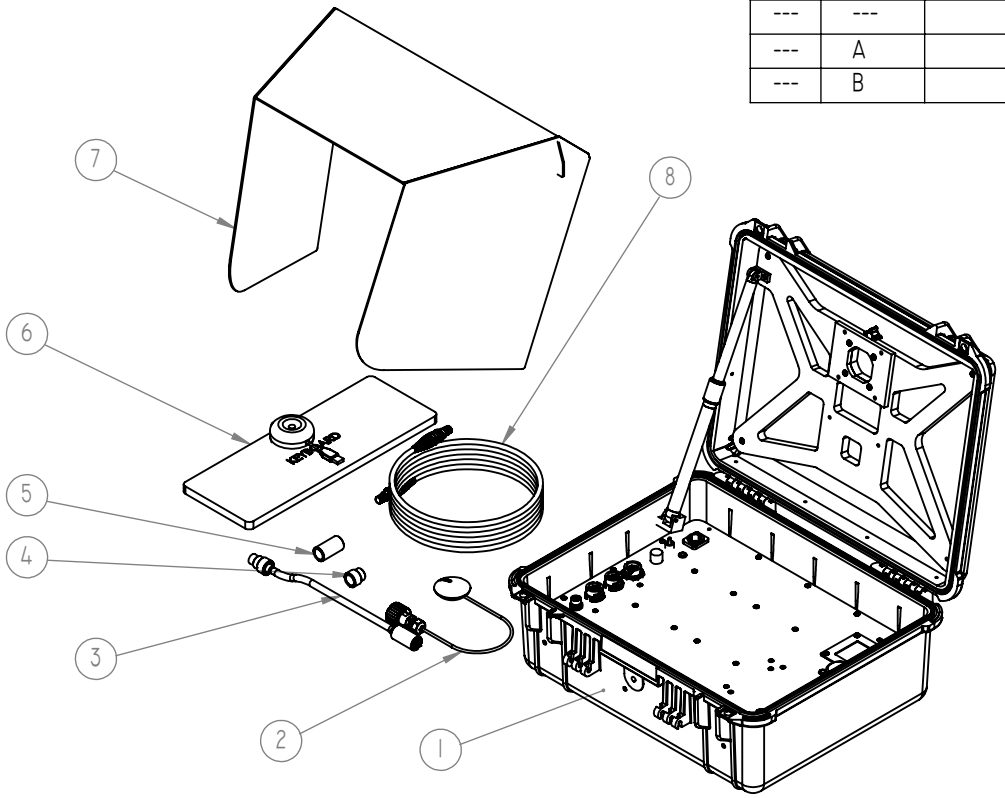

ITEM NO.	PART NUMBER	DESCRIPTION	QTY.
1	74426	Sealed AC/DC 400v ROV interface	1
2	72659	IP65 GPS Puck kit	1
3	DD8-001MF-ASSM	Tether Assembly Double Ended Connector Male/Female	1
4	THR-ENDCP-M	TETHER 8 PIN PART DUMMY CAP MALE	1
5	THR-ENDCP-F	THR-ENDCP-F	1
6	71855	MSS IP-65 RATED KEYBOARD WITH OVERLAY	1
7	XE-009	Sunshade Assembly 15"	1
8	73225	Fischer HMI connection 25 ft pre-terminated	1

Notice of Proprietary Information
The information contained in this drawing is the sole property of VideoRay, LLC. Any reproduction in part or as a whole without the written permission of VideoRay, LLC is prohibited.

ALL DIMENSIONS ARE IN INCHES UNLESS OTHERWISE SPECIFIED INTERPRET DRAWING PER ASME Y14.5-1994

REMOVE ALL BURRS AND BREAK SHARP EDGES

TOLERANCES UNLESS OTHERWISE SPECIFIED:

X.X	±0.03
X.XX	±0.010
X.XXX	±0.005
FRACTIONS	±1/16
ANGLES	±0.5

THIRD ANGLE

DRN:	JV	07/30/2021
CHK:	JV	08/11/2021
APP:	JV	11/14/2022

212 East High Street, Pottstown, PA 19464
USATel: +1 610-458-3000 FAX: +1 610-458-3010
www.videoray.com

TITLE: SEALED AC/DC 400V ROV INTERFACE
PART NO: 72847
SCALE:
MATERIAL: ---
SHEET TITLE: DRAWING
WEIGHT:
REV: B
STATUS: PRODUCTION
SIZE: A
SHEET: 1 OF 1

PLOT DATE: 7/12/2023 12:19:56 PM